Dishwasher

FFB62407ZW

Corner-to-corner. Covered
Even closely-stacked or larger dishes receive corner-to-corner cleaning with SatelliteClean®. The innovative spray arm guarantees water reaches everywhere. For deep-cleaning. With up to three-times better spray coverage, it provides stunning results across every surface.

Product Benefits & Features

Powerful dishwashing. With SatelliteClean®
Experience impeccable dishwashing with SatelliteClean®. This spray arm has three-times better coverage than the standard. Because the double rotating arm constantly changes the angle of the spray. Water reaches every corner. For a complete clean.

Water reaches every corner. With the Dual Spray Arms
Ensure maximum water coverage with two spray arms. The rotating sprinklers send water jets into every corner of both the lower and upper basket, for dishwashing results you can rely on.

QuickLift basket adjusts its height so you can get dishes easily
Indulge in the efficient amenities provided by the QuickLift basket. Regardless if you have a full load with bulky items, you can effortlessly adjust the height so you can easily load or remove dishes.

Fast and efficient performance
This dishwasher gives you perfect performance - fast, thanks to its special half-hour program.

- 46dB - ExtraSilent 44dB
- Water sensor detects the level of dirt and adjusts water consumption
- LED display
- AutoOff
- Warm water 60°C
- 9 programmes, 4 temperatures
- Dishwasher programmes: 160 Minutes, 60 Minutes, 90 Minutes, AUTO Sense, Eco, Extra Silent, Machine Care, Quick 30 Minutes, Rinse & Hold
- Options:ExtraHygiene, GlassCare, XtraPower
- Dual Spray Arm
- Satellite Spray arm
- Delay start option from 1 to 24 hours
- Remaining time
- Inverter motor
- Height adjustable upper basket, even when fully loaded
- Upper basket with 2 Red softspikes, Plastic coloured handle
- Cutlery basket
- Lower basket with 2 foldable plate racks, Plastic coloured handle
- AQUA-CONTROL
- Panel with symbols
- Indications for salt and rinse aid

AEG

Dishwasher

FFB62407ZW

Product Specification

Product Number Code	911 054 057
Bar code	7332543735648
EnergyClassE20	E
EnergyCons100CycleE20	70
RatedCapacityE20	9
WaterConsE20	9.9
ProgrammeDurE20	4:00
NoiseClassE20	C
NoisedBAE20	49
OffModePwE20	0.5
StandByPwE20	0.5
DelayStartE20	4
Installation in height	None
Installation	FS
Inlet hose type of	Aqua control
Anti-flood device	Floating switch
Water supply	Cold or hot
Panel colour	White
Required fuse (A)	10
Connected load (W)	1950
Voltage	220-240
Cord length external	1.5
Height total	850
Width mm	446
Depth mm	615

Built in depth mm	570
Built in height (min), mm	820
Built in width mm	450
Weight gross cleaner and accessories with packaging	38.05
Weight net cleaner and accessories no packaging	36.25
Package heigth	900
Package width	490
Package depth	685
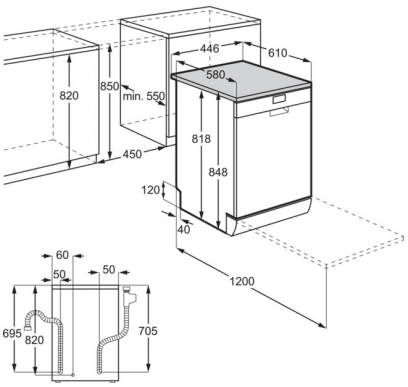
PSGBDW210DE00002