BI Hob

ZHDN670X

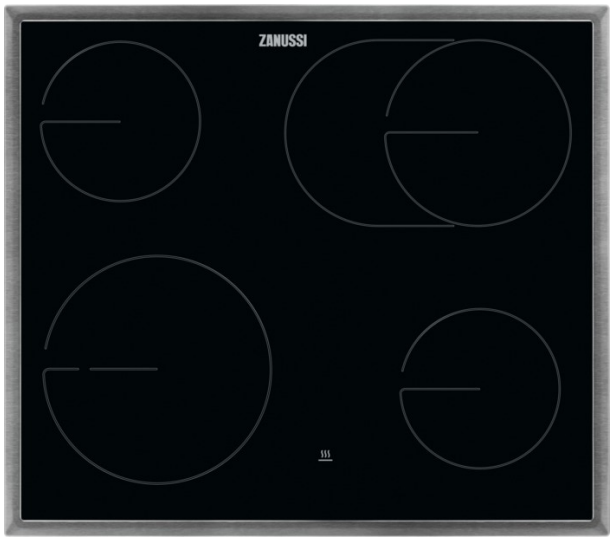

Glass surface for quick cleaning
The smooth ceramic hob is easy to clean. The completely flat surface can be wiped down once cool, and you don't need to think about any specialist equipment.

Product Benefits & Features

Space for any pan, with OvalZone
OvalZone is designed to make sure you can cook with any pan – no matter how large, or uniquely shaped it is.

- Hob without controls, for combination with oven or separate control panel
- Fast heating hilight cooking zones
- Frame type: Promise standard, Stainless Steel
- BI-Oven Control
- Residual heating indicator:
- Hob safety:
- Ceramic glass colour: Black

BI Hob

ZHDN670X

Product Specification
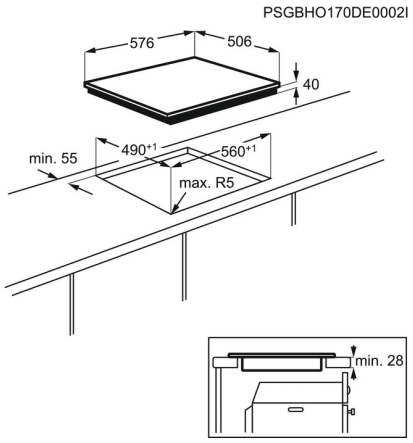
Installation	Normal BI
Product Number Code	949 595 710
EAN	7332543716739
Built in height mm	38
Width mm	576
Depth mm	506
Width cutting	560
Depth cutting	490
Frame Colour - colour of the frame	Stainless steel
Hob type	Ceramic Glass
Cord length external	1.5
Type of plug	No
Total electricity loading	6400
Left front - Power/Diameter	750/2200W/120/210mm
Rear - Power/Diameter	1200W/145mm
Right front - Power/Diameter	1200W/145mm
Right rear - Power/Diameter	1500/2400W/170x265mm
Voltage	220-240
Weight gross cleaner and accessories with packaging	7.78
Weight net cleaner and accessories no packaging	7.02
Package heigth	118
Package width	678
Package depth	600